Parts List					
Item	Qty	Part Number	Description	Material	Mass
1	1	293-111BW	MP/TP Flange before weld	S355 NL	20014 kg

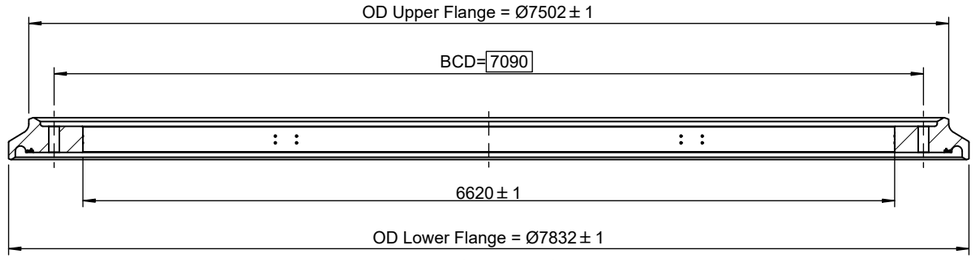

A-A (1 : 50)

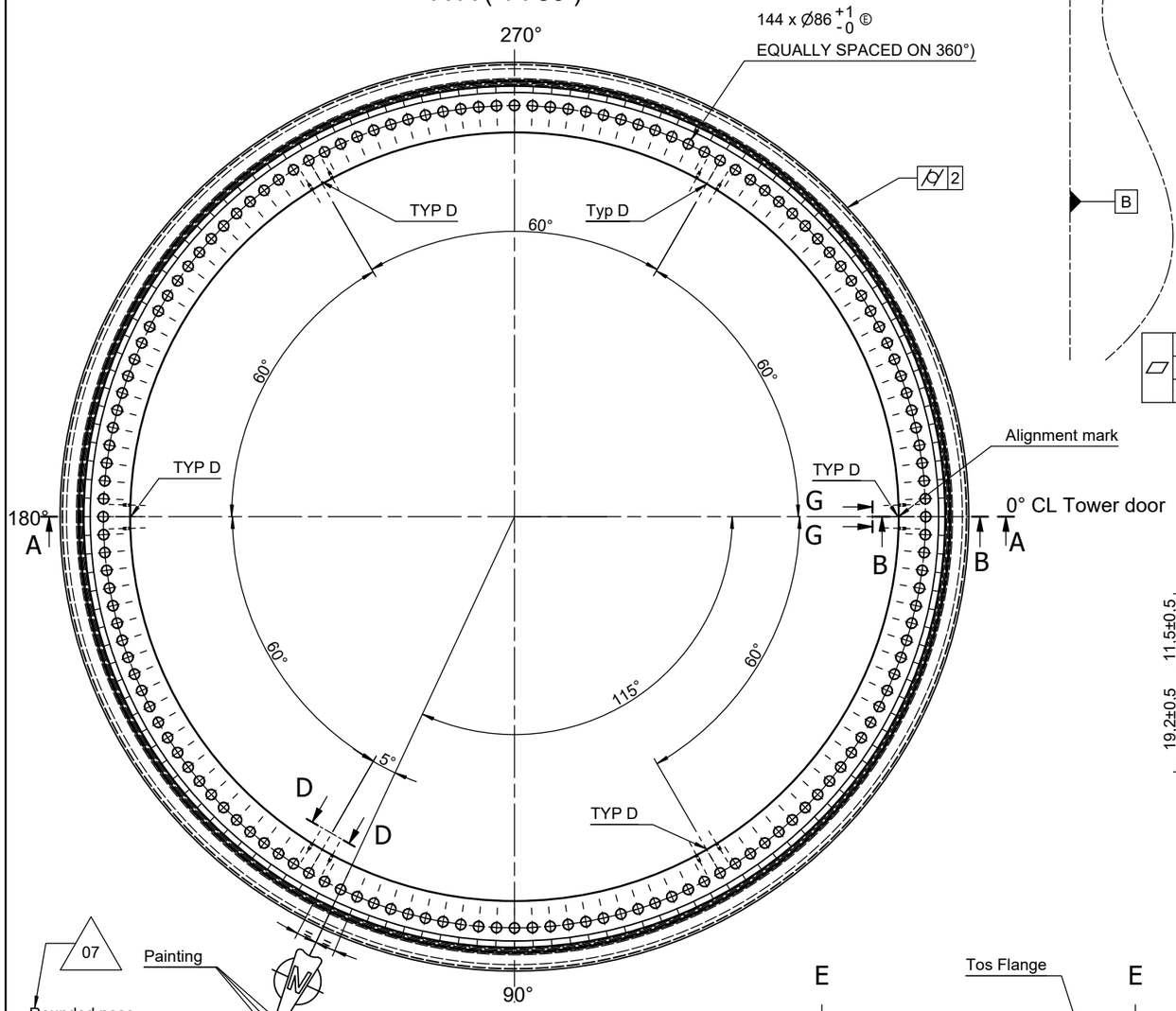

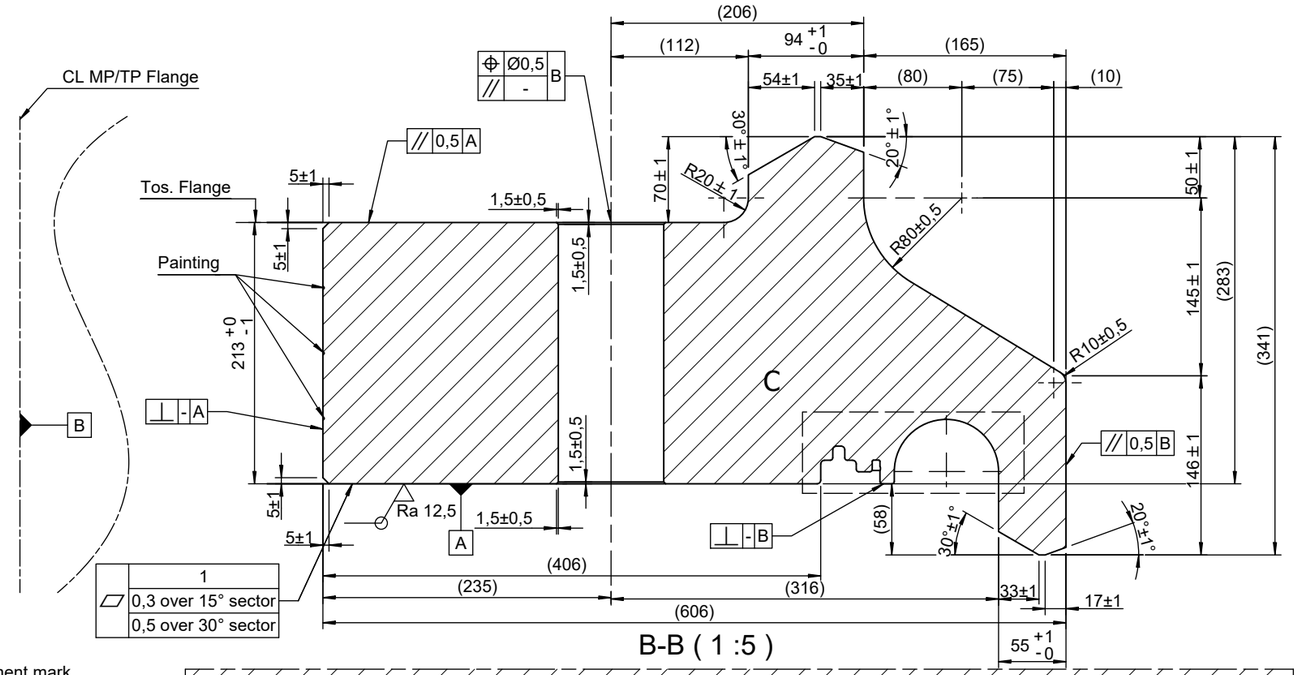

B-B (1 :5)

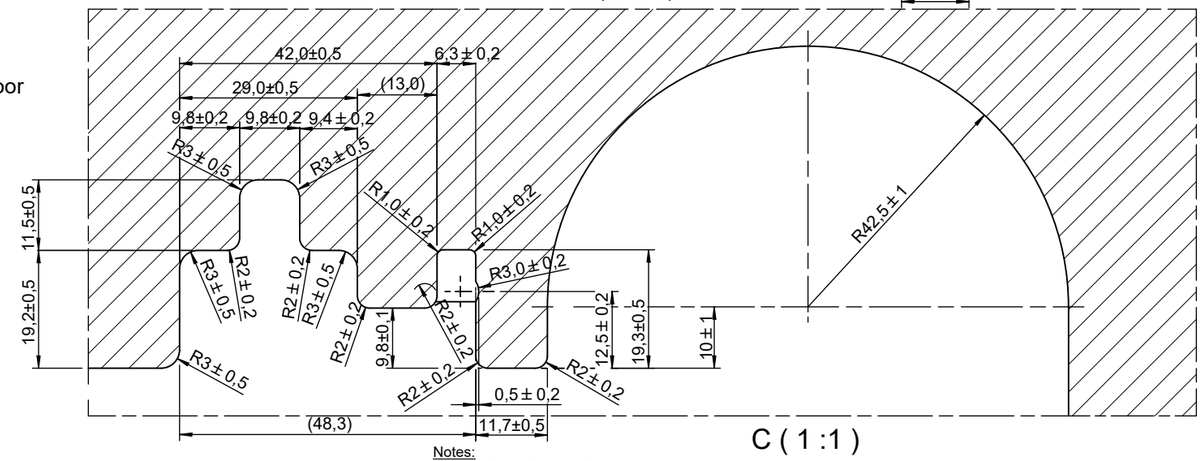

C (1 :1)

Notes:
1. All dimensions are in mm.
2. Total mass = 20014 kg
3. Total unit quantity = 176 pcs.
4. Pls. be informed that the drawings are subject to approval by notifier (DNV). This approval is expected to be received before new year 2022 and will be shared with you as soon as possible.
5. The flange must be ***delivered*** with Ø7832 flange facing up.
6. Soft nose stamping depth of 0,2-0,4 mm TQ0099 (for Flange traceability)

References:
1. General Notes CVOW-C-DD-MPWTG-DR-GEN-01-001
2. Drawing: CVOW-C-DD-MPWTG-DR-PS-04-101 and CVOW-C-DD-MPWTG-DR-PS-04-202

TAEWOONG FOR FABRICATION Forging Purchasing Team

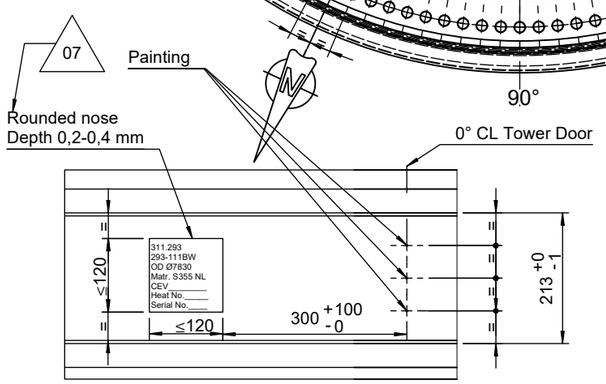

G-G (1 : 10)
Alignment mark and Serial No.

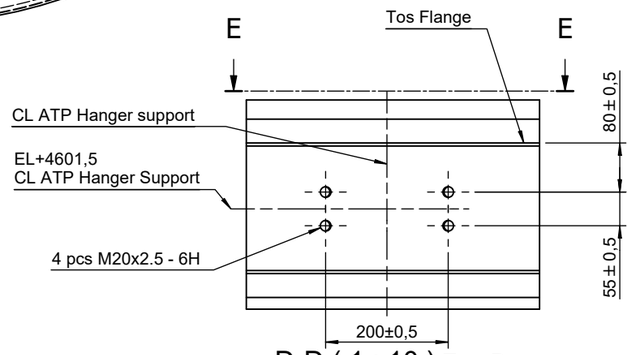

D-D (1 : 10) Typ. D

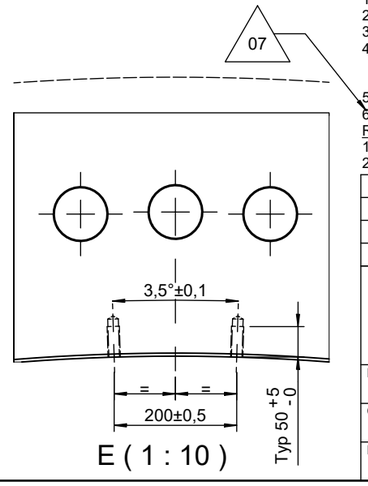

E (1 : 10)

REV	REVISION DESCRIPTION	DATE	AUTHOR	CHECKED	APPROVED	REV
07	Soft nose stamping approved	30-03-2023	LHU	MUL	RHJ	02
06	Drawing number corrected and deleted dimension	13-03-2023	LHU	MUL	RHJ	01
05	Add Painting / NOTE 6 and remove soft nose	10-03-2023	LHU	MUL	TKC	00

04
03

BLADT INDUSTRIES — Dominion Energy®

Design Drawing No:	See References: *
Client code:	N/A
Client No:	N/A
Project	Coastal Virginia Offshore Wind Commerical
Client	Dominion Energy
Projection	
Scale	1 : 50
Size	A3
Description	MP/TP Flange before weld
ON.	311293
Draw.no.	293-111BW
Rev.	07