Parts List					
Item	Qty	Part Number	Description	Material	Mass
1	1	293-110BW	TP Flange before weld	S355 NL	16006,195 kg

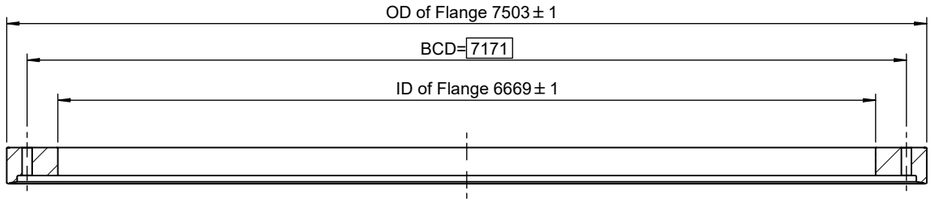

A-A (1 : 50)

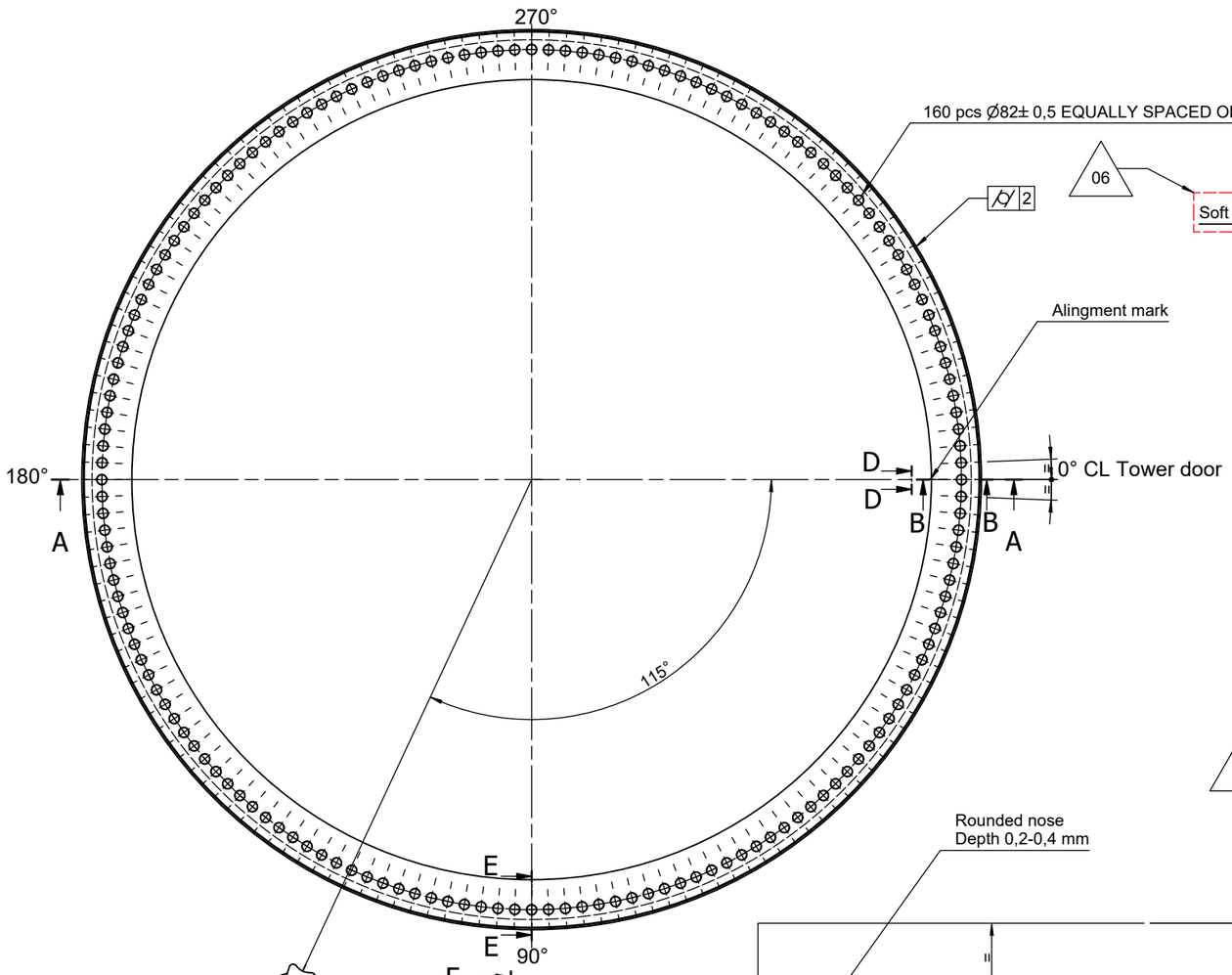

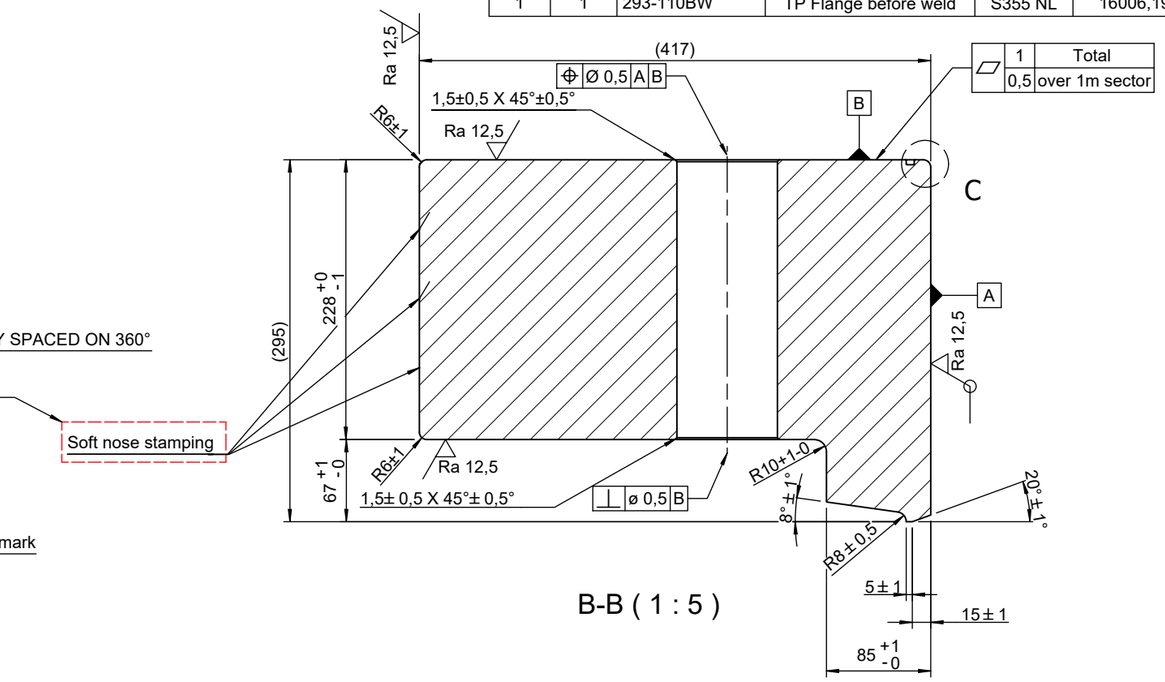

B-B (1 : 5)

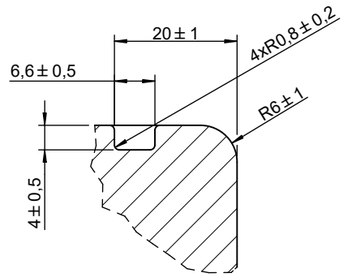

C (1:1)
Packing groove

Notes:
1. All dimensions are in mm.
2. Total mass = 16006 kg
3. Total unit quantity = 176 pcs.
4. Pls. be informed that the drawings are subject to approval by notifier (DNV). This approval is expected to be received before new year 2022 and will be shared with you as soon as possible. Tolerances will be confirmed on next revision.
5. The flange must be ***delivered*** with weld bevel facing up.
6. Soft nose stamping depth of 0,2-0,4 mm (for Flange traceability)

References:
General Notes notes CVOW-C-DD-MPWTG-DR-GEN-01-001

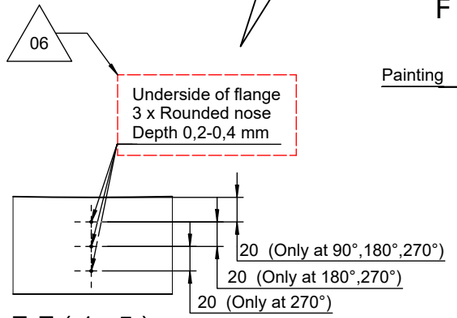

F-F (1 : 5)

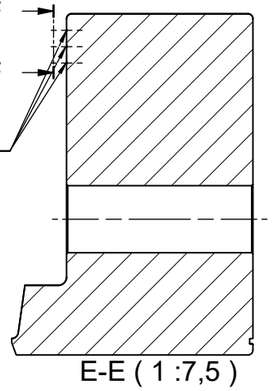

E-E (1 :7,5)
Position marks

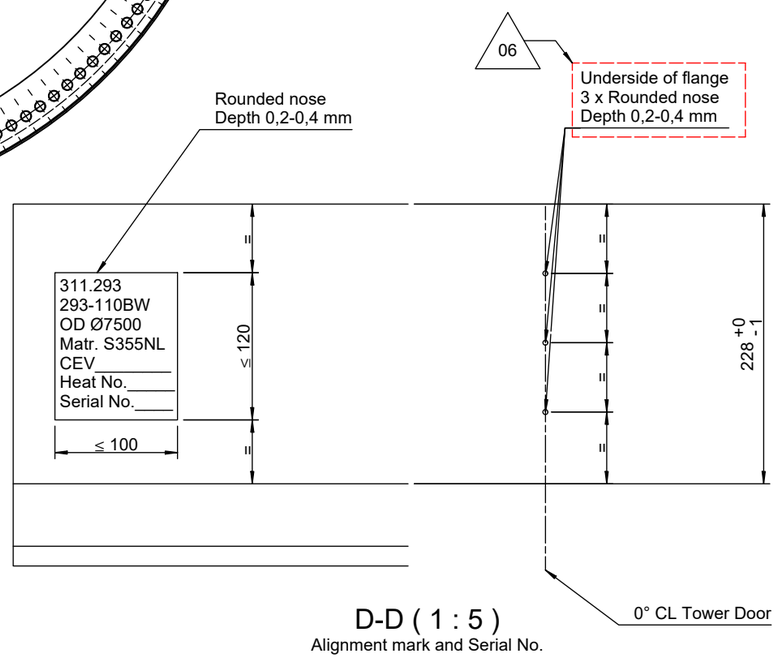

D-D (1 : 5)
Alignment mark and Serial No.

REV	REVISION DESCRIPTION	DATE	AUTHOR	CHECKED	APPROVED
06	Soft nose stamping approve TQ 0099	16-06-2023	LHU	MUL	RHJ
05	Soft nose stamping approve TQ 0099	30-03-2023	LHU	MUL	RHJ
04	Drawing number corrected	13-03-2023	LHU	MUL	RHJ
03	Add Painting / NOTE 6 and remode soft nose	10-03-2023	LHU	MUL	RHJ
02	Add Serial No. and NOTE 6	08-03-2023	LHU	MUL	TKC
01	Based on design DR-PS-04-201 drawing Rev. 7	01-03-2023	LHU	MUL	TKC
00	Based on design drawing Rev. 4	28-02-2023	LHU	MUL	TKC

BLADT INDUSTRIES | Dominion Energy®

Design Drawing No:	CVOW-C-DD-MPWTG-DR-PS-04-201
Client code:	N/A
Client No:	N/A
Project	Coastal Virginia Offshore Wind Commerical
Client	Dominion Energy
Projection	
Scale	1 : 50
Size	A3
Description	TP Flange before weld
ON.	311293
Draw.no.	293-110BW
Rev.	06