230324-60981-001~030

All Surface roughness : Ra12.5

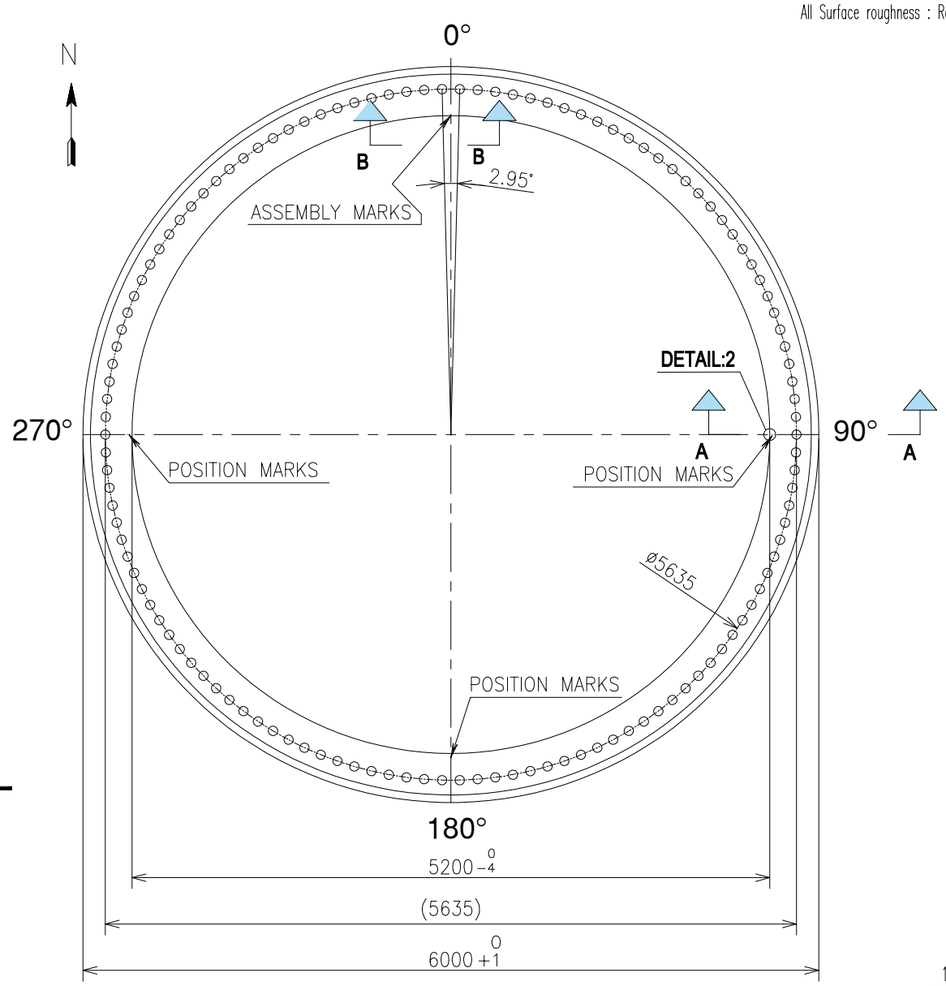

TOP VIEW

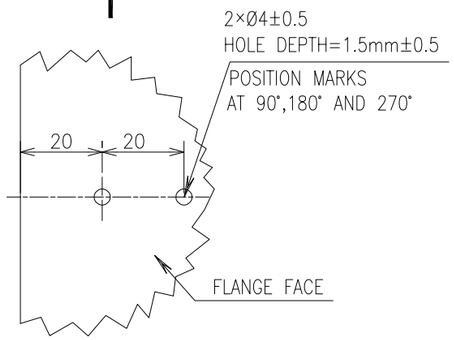

DETAIL 2
POSITION MARKS

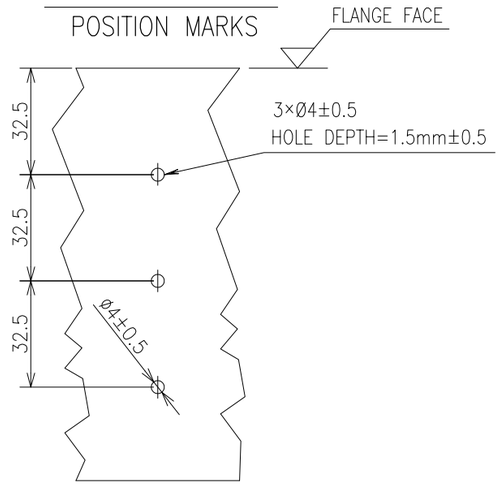

SECTION B-B
ASSEMBLY MARKS AT 0°

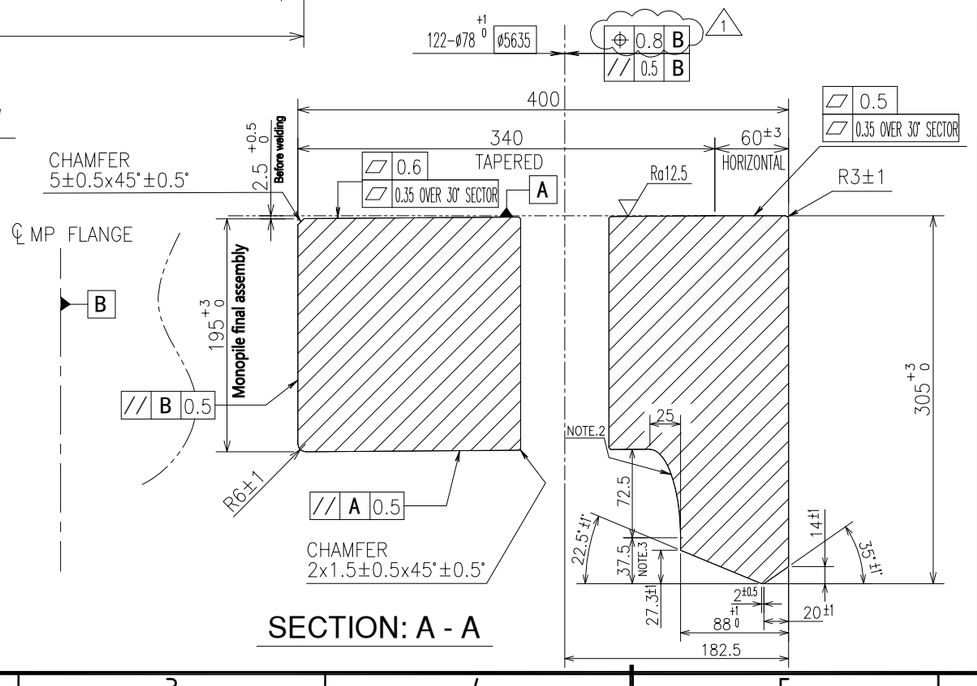

SECTION: A - A

KEY-PLAN

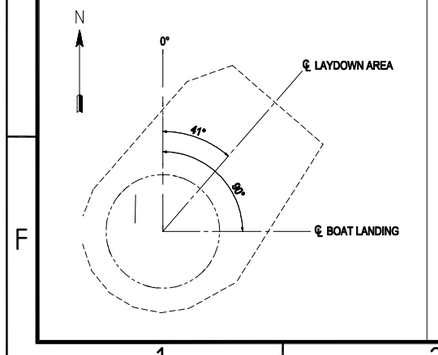

NOTES:

1. FOR GENERAL NOTES, SEE: NOY-V10_RBL-TQC0006 Rev.0
   FOR DESIGNERS REQUIREMENT FOR STEELWORKS, SEE: NOY-V10_RBL-TFC0002
2. ELLIPTICAL ROUNDING OF FLANGE NECK.
3. IN CASE BACK UP FLANGES ARE ORDERED, INCREASE THIS BY AT LEAST 50 mm. THIS AND THE NUMBER OF BACK UP FLANGES SHALL BE CONFIRMED BY THE EMPLOYER BEFORE ORDERING.IT WILL CASE BY CESE .
4. THE FOLLOWING STEEL GRADE IS USED ON THIS DRAWING, U.N.O. ON A DETAIL:
   S355NL AS FORGED MATERIAL, IF NOT NEED TO BE Z35 IN ACCORDANCE WITH EN10164 . WITH A MINIMUM CERTIFICATE YIELD STRENGTH OF NOT LESS THAN 275MPa THE CORRESPONDING STANDARDS FOR THE STEEL GRADES CAN BE FOUND IN THE DESIGNERS REQUIREMENT FOR STEELWORKS.
5. THE WEIGHT OF THE FLANGE IS 11191.7kg/PCS (THEORETICAL NET WEIGHT)
6. UNMARKED DIMENSION TOLERANCE REFER TO EN-13920
7. ALL DIMENSIONS ARE IN MILLIMETERS UNLESS OTHERWISE NOTED
8. FOR FLANGE NDT EXTENT IS 100% UT AND 100% MPI.

REFERENCE DRAWINGS

TITLE	DRAWING NO.	Rev.
DESIGNER REQUIREMENTS-GENERAL NOTES	NOY-V10_RBL-TQC0006	0
DESIGNER REQUIREMENTS-STEELWORKS	NOY-V10_RBL-TFC0002	1
INTERFACE FLANGES MONOPILE FLANGE SECTIONS AND DETAILS	NOY-V10_RBL-TLA0025	3A
INTERFACE FLANGES MP-TP FLANGE CONNECTION MAIN LAYOUT	NOY-V10_RBL-TLA0015	4

REVISION TABLE

REV	REASON FOR ISSUE	DATE	PREPARED BY	CHECKED BY	APPROVED BY
1	ISSUED FOR CONSTRUCTION	17-03-2023	Liu Yujie	Qian Junjie	Liu Hailing
0	ISSUED FOR CONSTRUCTION	01-03-2023	Liu Yujie	Qian Junjie	Liu Hailing
C	ISSUED FOR REVIEW	04-02-2023	Liu Yujie	Qian Junjie	Bai Yulong
B	ISSUED FOR REVIEW	26-12-2022	Liu Yujie	Qian Junjie	Bai Yulong
A	ISSUED FOR REVIEW	18-12-2022	Liu Yujie	Qian Junjie	Bai Yulong

PROJECT NAME: NOIRMOUTIER OFFSHORE WIND FARM PROJECT

NOY DRAWING NUMBER: NOY-V10_DAJ-VLB0003 Rev.D Flange Sections and Details Shop Drawing

TITLE: WTG - Flange Section and Details Shop Drawing

NOY REVISION: D

REVISION DESCRIPTION: Issued for Construction

SHEET SIZE: A3 **SHEET SCALE:** 1:100 **SHEET NO.** 1 OF 1

CONTRACTOR DETAILS

CONTRACTOR DRAWING NO.: DJ22-79-ST-FL-01 **CONTRACTOR REVISION:** 1

CONTRACTOR:

THIS DOCUMENT CONTAINS CONFIDENTIAL AND PROPRIETARY INFORMATION OWNED BY DAJIN AND IS DEEMED COPYRIGHT UNDER INTELLECTUAL PROPERTY RIGHTS. THIS INFORMATION SHOULD BE HELD IN CONFIDENCE BY THE RECIPIENT AND MUST NOT BE USED FOR ANY PURPOSE OTHER THAN THAT FOR WHICH IT IS SUPPLIED. IT MUST NOT BE REPRODUCED, COPIED OR LENT IN WHOLE OR IN PART WITHOUT WRITTEN PERMISSION FROM DAJIN.

UNCONTROLLED WHEN PRINTED

© COPYRIGHT STATEMENT
Noirmoutier offshore wind farm © 2022. This document is the property of contractors and sub-contractors and shall not be reproduced nor transmitted without prior written approval.

ISO 5457-A3T

A 3